Model: Steelworx Hexagonal Shelter, 16', Model # HX-16-SW

Manufacturing Mission: To provide all prefabricated components and installation instructions for a 16' hexagonal (measured from eave to eave) free standing bolt together, tubular steel constructed shelter kit.

Design Criteria: Structure is typically designed for a 30 lb live load and a 95-100 mph wind load capacity. All structural members are ASTM A-500 U.S. grade B steel. Welded connection plates shall be ASTM A-36 hot rolled steel. All welding performed to latest AWS standards by ASTM Certified welders and provided in accordance to same.

Tubular Steel Columns and Beams: Standard column dimensions shall be 5" x 5" x 3/16" tubular steel welded to 5/8" base plate (footing design provided separately). Perimeter and interior support beams are 5" x 5" to 5" x 7" with a thickness between 1/8" and 3/16" based on location and customer criteria. Economy Version (EV) of this shelter model for residential or less stringent design locations are available with smaller more economical member sizes.

Roof: Standard pitch is 4:12. Role formed metal roof decking is Kynar finished, 20 year warranted, 24 gauge ribbed steel attached to beams with engineered strength self tapping screws. Standing Seam and/or Multi Rib profiles available.

Frame Finish: Contaminates and oils are eliminated with welded raw steel being sand blasted to a white condition. Corrosion protective Polyester Powder coating electro-statically applied and cured to 450 degrees in our state of the art cure oven polyester power coating process. E-coat primer is also available at an additional charge.

Hardware: All structural hardware provided and to be A-325 or B7 as required.

Not Included: Concrete work of any kind, unloading of product and installation.

Additional Options:

- Flexibility of Design Such as: Height and Pitch
- Additional Engineering
- Variety of Colors
- Decorative Railings, Lattice, Braces, Trim, etc.
- Cupolas and Rooftop Accs.
- Column Surrounds and Design Changes
- Lexan Wind Screens
- Tongue & Groove Roof Deck
- Standing Seam Roofing
- Composite Finished Ceiling
- Solar Lighting

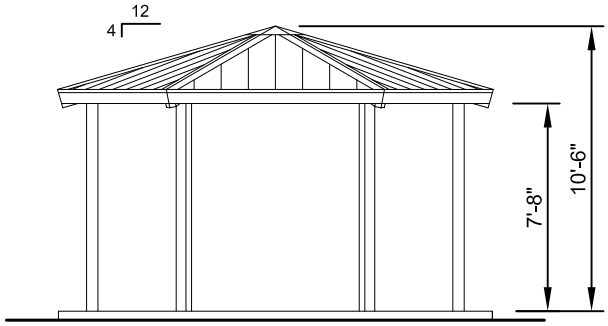

ELEVATION
SCALE: NTS

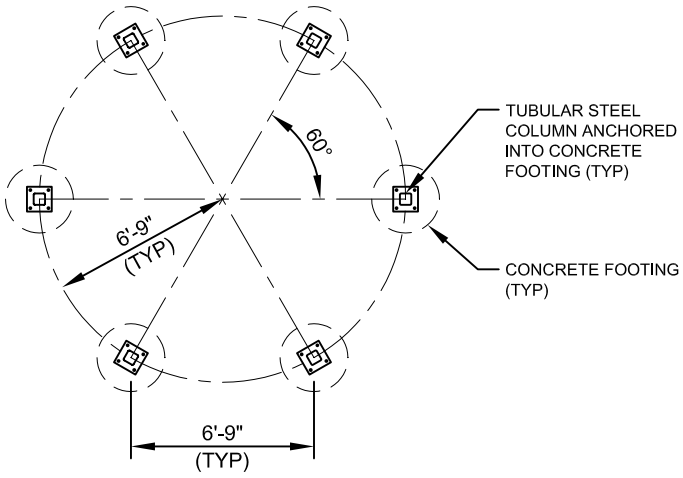

FOOTING LAYOUT PLAN
SCALE: NTS

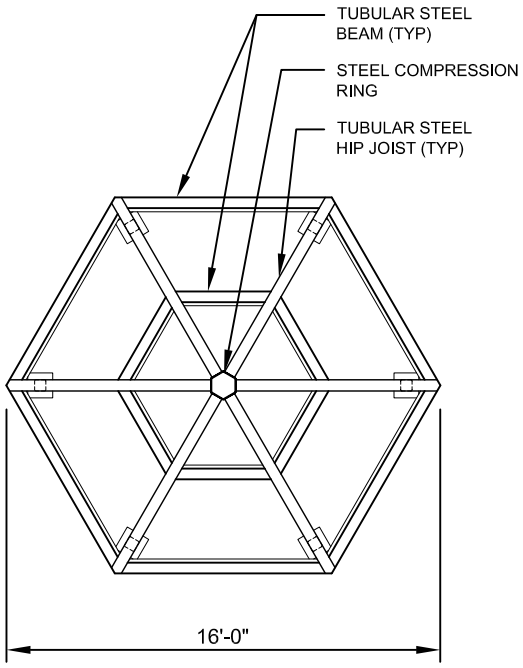

FRAMING PLAN
SCALE: NTS

COVERWORX
Recreational Architecture
A Division of Ross & Barr Inc.

11800 East 9 Mile Road
Warren, MI 48089
Office: (586) 759-5490
Fax: (586) 754-9130
Toll Free: (800) 657-6118
Email: info@coverworx.net
www.CoverWorx.net

Steelworx Hexagonal Shelter - 16'

Model: HX-16-SW

DESIGN SPECIFICATIONS